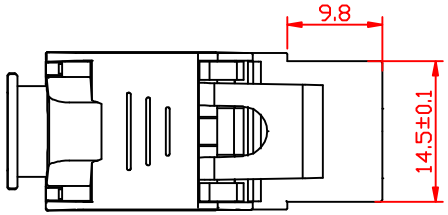

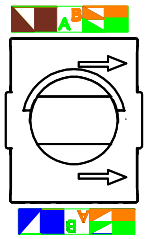

防尘盖顶面粘
贴色标示意图

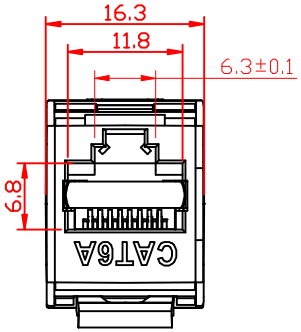

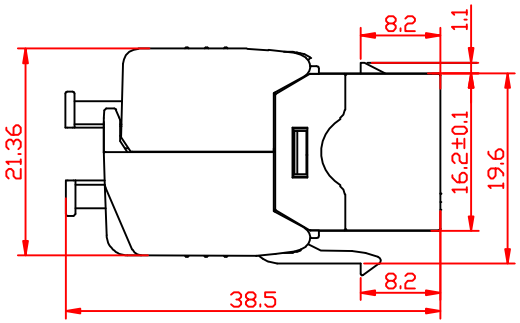

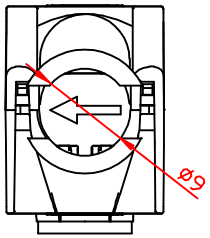

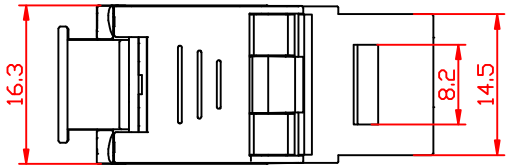

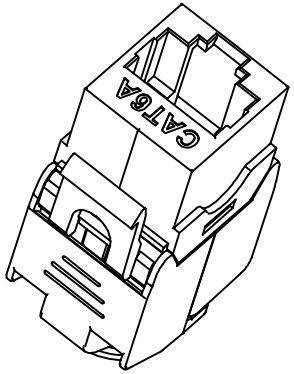

NOTES:

ELECTRICAL:

1. VOLTAGE RATING:125 VAC RMS
2. CURRENT RATING:1.5AMP
3. CONTACT RESISTANCE:100MILLIOHMS MAX
4. INSULATION RESISTANCE:1000 MEGOHMS MIN @500 VDC
5. DIELECTRIC STRENGTH:750 VAC RMS 60Hz,1MIN

ENVIRONMENTAL:

1. STORAGE:-40° TO+85°
2. OPERATION:0° TO70°

MECHANICAL:

1. THE SHELL MATERIAL: ZINC ALLOY
2. HOUSING MATERIAL:ABS
3. INSERT MATERIAL:FAME RETARDANCY PBT
4. PCB MATERIAL:FR-4 T=1.6mm
5. CONTACT MATERIAL:PHOSPHOR BRONZE STAMP PIN T=0.30mm
6. IDC CONTACT MATERIAL:PHOSPHOR BRONZE T=0.50mm WITH TIN PLATING
7. RJ45 JACK ;LIFE:750 TIMES MIN
8. IDC LIFE:200 FTIMES MIN
9. WIRE:AWG 23-26

SYM	Number	Bill No. of Alteration	Signature	Date

Drawn			
Checked			
Approved		2018.9.20	

Tolerance

0.00-20.00	±0.10
20.00-50.00	±0.15
50.00-100.00	±0.20
100.00-	±0.25
Angle	±30'

Material			Item No.	PL149
Angles Projection	Size	Scale	Unit	Part Name: CAT6A Tool free Keystone Jack Shielded Type
	A4	X:1	mm	
Sheet	1 OF 1	Version: A/0		ERP Part No.